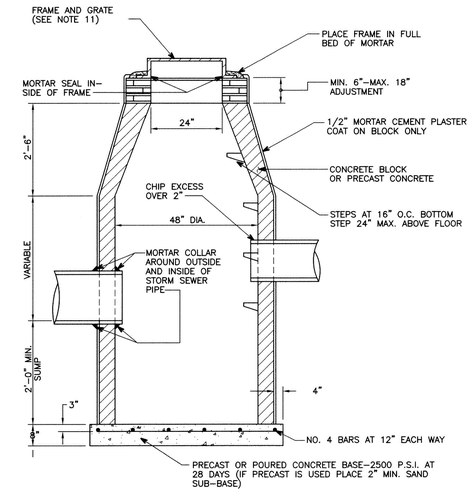

SPECIAL CATCH BASIN NOTES:

1. DIAMETER OF "YARD" CATCH BASIN MAY BE REDUCED TO 36" PROVIDED THERE IS ONE (1) PIPE IN THE STRUCTURE AND THE DISTANCE TO THE OUTLET MANHOLE IS LESS THAN 150'.
2. CATCH BASINS MUST DISCHARGE INTO MANHOLES AND NOT INTO OTHER CATCH BASINS, EXCEPT:
   A. WHERE CATCH BASIN IS A "YARD" TYPE WITH NOT MORE THAN THREE (3) CATCH BASINS DISCHARGING INTO IT.
   B. WHERE CATCH BASIN IS A "PAVEMENT TYPE" DISCHARGING INTO ANOTHER CATCH BASIN LOCATED WITHIN 75 FEET.

4 FT. DIAMETER CATCH BASIN

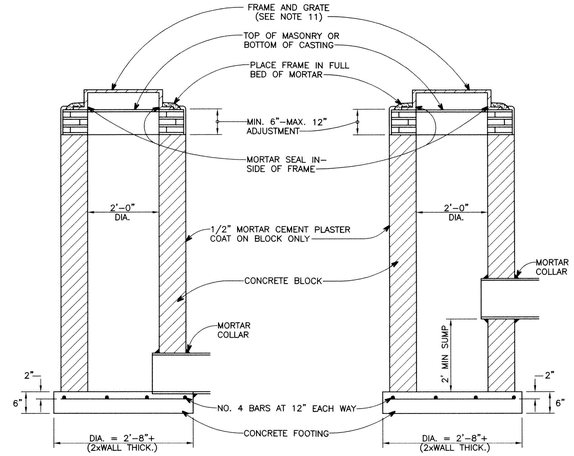

2 FT. DIAMETER INLET

2 FT. DIAMETER CATCH BASIN

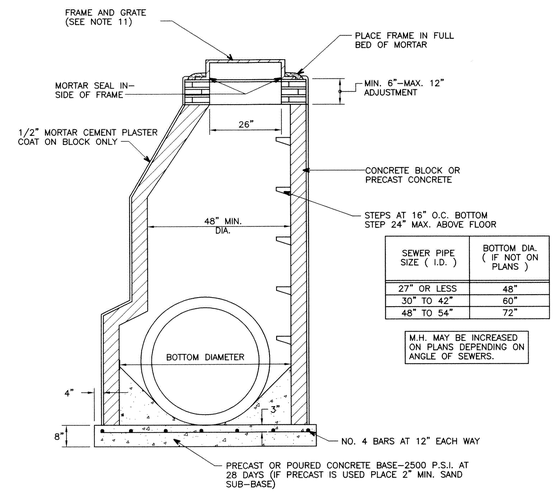

SEWER PIPE SIZE (I.D.)	BOTTOM DIA. (IF NOT ON PLANS)
27" OR LESS	48"
30" TO 42"	60"
48" TO 54"	72"

M.H. MAY BE INCREASED ON PLANS DEPENDING ON ANGLE OF SEWERS.

STORM SEWER MANHOLE "A"

STORM SEWER NOTES

1. AT LEAST SEVENTY-TWO (72) HOURS PRIOR TO CONSTRUCTION, THE CONTRACTOR SHALL GIVE NOTIFICATION OF HIS INTENTION TO BEGIN CONSTRUCTION TO THE CITY OF ROSEVILLE ENGINEERING DEPARTMENT, THE MACOMB COUNTY PUBLIC WORKS COMMISSION OR THE ROAD COMMISSION OF MACOMB COUNTY WHEN INSPECTIONS ARE NEEDED BY THAT AGENCY.
2. PRIOR TO CONSTRUCTION, THE CONTRACTOR MUST HAVE IN HIS POSSESSION A COPY OF A VALID PERMIT TO CONSTRUCT A CONNECTION TO, OR AN EXTENSION OF, THE STORM WATER DRAINAGE SYSTEM, FROM REQUIRED AGENCY ON THE JOB AT ALL TIMES OF CONSTRUCTION.
3. THE CONTRACTOR SHALL SECURE PERMITS FROM THE MACOMB COUNTY PUBLIC WORKS COMMISSION, MICHIGAN DEPARTMENT OF TRANSPORTATION OR ANY OTHER AUTHORITY AFFECTED FOR ALL TAPS AND CROSSINGS OF DRAINS OWNED BY THAT AGENCY AND SHALL PAY THE COSTS OF SAID PERMITS AND THE COST OF ANY INSPECTION CHARGES BY THAT AGENCY FOR WORK DONE UNDER THE PERMITS.
4. PRIOR TO ANY CONSTRUCTION, THE CONTRACTOR SHALL TELEPHONE MISS DIG (1-800-482-7171) FOR LOCATION OF UNDERGROUND FACILITIES, AND SHALL ALSO NOTIFY REPRESENTATIVES OF ANY OTHER FACILITIES, LOCATED IN THE VICINITY OF THE WORK, WHICH MAY NOT BE HANDLED BY MISS DIG.
5. ALL STORM WATER DRAINAGE SYSTEM CONSTRUCTION SHALL CONFORM TO THE CURRENT STANDARDS AND SPECIFICATIONS OF THE MUNICIPALITY, COUNTY ROAD COMMISSION AND/OR COUNTY PUBLIC WORKS COMMISSION AS APPLICABLE.
6. ALL SEWER PIPE UNDER PAVED AREAS SHALL BE REINFORCED CONCRETE WHICH CONFORMS TO ASTM SPECIFICATION C76 WITH CLASS DESIGNATION ON PLANS.
7. UNLESS OTHERWISE INDICATED ON THE PLANS, ALL STORM SEWER JOINTS SHALL BE TONGUE AND GROOVE WITH RUBBER "O" RING GASKETS.
8. UNLESS OTHERWISE INDICATED ON THE PLANS, ALL STORM SEWER BEDDING SHALL BE STANDARD BEDDING.
9. ALL WYES AND BUILDING SERVICE CONNECTIONS SHALL BE POLY VINYL CHLORIDE (PVC) SEWER PIPE SCH. 40 OR SDR 23.5.
10. ALL STORM SEWER WYE OPENINGS SHALL BE FACTORY INSTALLED EXCEPT WHEN USING ABS TRUSS PIPE FOR SUMP PUMP DISCHARGE OUTLET. WHEREVER POSSIBLE SERVICE CONNECTIONS SHOULD DISCHARGE DIRECTLY INTO A CATCH BASIN.
11. UNLESS OTHERWISE NOTED ON THE PLANS, STRUCTURE FRAME AND COVERS SHALL BE AS FOLLOWS:

    MANHOLE
    E.J.I.W. 1040 FRAME, TYPE B, PERFORATED COVER.

    CATCH BASIN OR INLET (PAVEMENT TYPE)
    E.J.I.W. 5105 OR NEENAH R-3036 WITH SINUSOIDAL GRATE (MDSH COVER D4)

    CATCH BASIN (YARD TYPE)
    E.J.I.W. 1045 OR NEENAH R-2579 WITH OVAL GRATE HAVING A RISE ABOVE THE FRAME OF 2 1/2".
12. STEPS TO BE INSTALLED DURING MANUFACTURING OF MANHOLE SECTION. STEPS MUST BE E.J.I.W. NO. 8503 M.A. INDUSTRIES P.S.I. POLYPROPYLENE OR APPROVED EQUAL.
13. UNLESS OTHERWISE AUTHORIZED BY THE CITY ENGINEER, EACH STRUCTURE SHALL BE CONSTRUCTED TOTALLY OF EITHER PRE-CAST CONCRETE SEGMENTS OR BUILT-UP MORTAR & BLOCK. . PRIVATE DEVELOPMENTS
14. BEFORE FINAL ACCEPTANCE, A FINAL INSPECTION MUST BE MADE BY THE OWNER AND (1) SET OF AS-BUILT PRINTS AND (1) SET OF AS-BUILT ELECTRONIC DRAWINGS IN 24"x36" PDF FORMAT SHALL BE SUBMITTED TO THE CITY OF ROSEVILLE ENGINEERING DEPARTMENT.

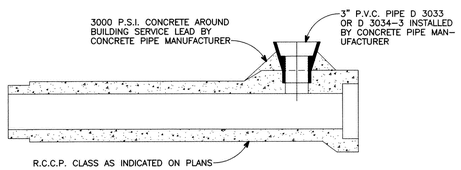

STANDARD WYE DETAIL IN CONCRETE PIPE FOR SUMP PUMP CONNECTION

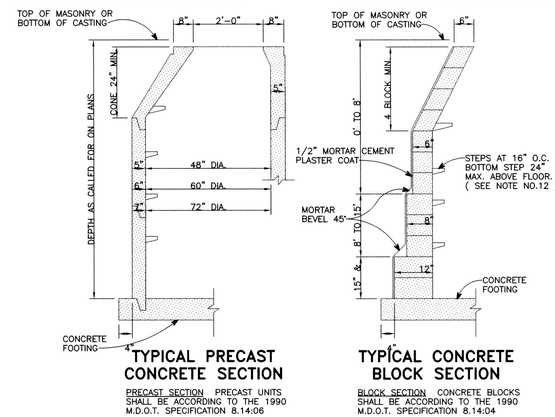

TYPICAL PRECAST CONCRETE SECTION

PRECAST SECTION PRECAST UNITS SHALL BE ACCORDING TO THE 1990 M.D.O.T. SPECIFICATION 8.14:06

TYPICAL CONCRETE BLOCK SECTION

BLOCK SECTION CONCRETE BLOCKS SHALL BE ACCORDING TO THE 1990 M.D.O.T. SPECIFICATION 8.14:04

TYPICAL WALL SECTIONS FOR ALL DRAINAGE STRUCTURES

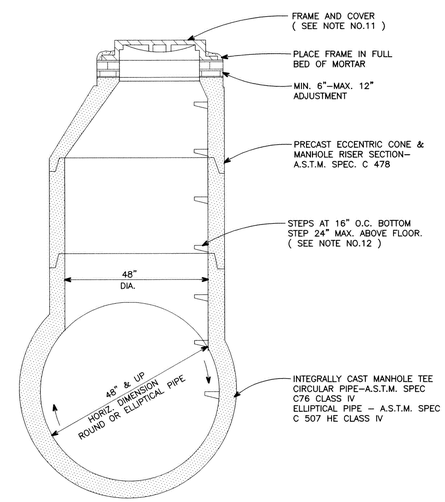

STORM SEWER TEE MANHOLE "B"

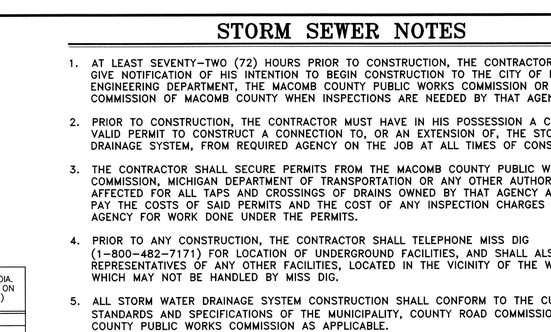

STORM SEWER TEE MANHOLE "B" WITH FLAT SLAB

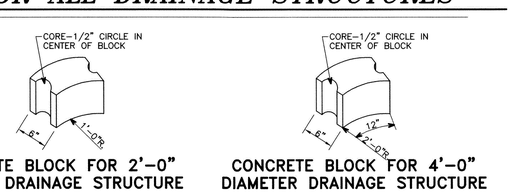

CONCRETE BLOCK FOR 2'-0" DIAMETER DRAINAGE STRUCTURE

CONCRETE BLOCK FOR 4'-0" DIAMETER DRAINAGE STRUCTURE

CONCRETE BLOCKS

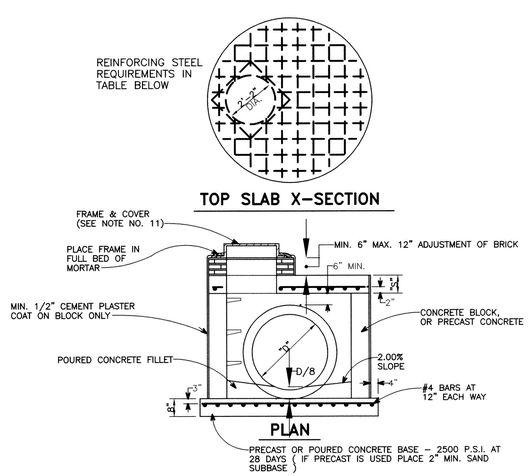

OUTLET "D"	M.H. I.D. #	TOP SLAB "S"	REINFORCING STEEL (T.S.)
27" OR LESS	4	9"	3/4" @ 9" EA. WAY
42"	5	10"	3/4" @ 9" EA. WAY
48"-54"	6	11"	7/8" @ 9" EA. WAY
	7	12"	1" @ 9" EA. WAY
	8	12"	1" @ 9" EA. WAY

* DIAMETER OF MANHOLE SHALL BE INCRESED AS SHOWN ON THE PLANS DEPENDING ON THE ANGLE OF SEWERS

STORM SEWER MANHOLE "A"

WITH FLAT SLAB TOP

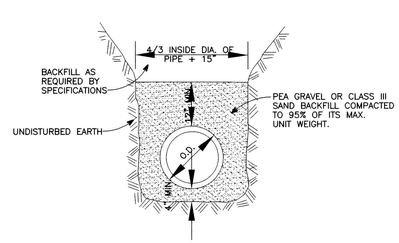

STANDARD BEDDING

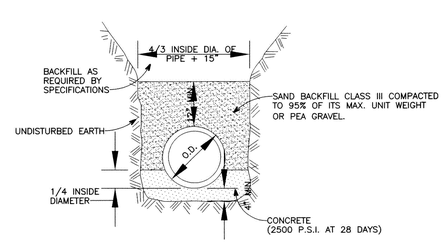

CONCRETE BEDDING

CITY OF ROSEVILLE STORM SEWER DETAILS

DEPARTMENT OF PUBLIC WORKS

APPROVED BY : GARY BIERL, DIRECTOR

DATE : MARCH 6, 2008

ANDERSON, ECKSTEIN AND WESTRICK, INC.
Civil Engineers • Surveyors • Architects
51301 Schoenherr Road, Shelby Township, Michigan 48315
Phone 586•726•1234 Fax 586•726•8780

PROJECT NO.	SHEET NO.
DATE MARCH, 2008	
DRAWN BY KJP / CHECKED BY SPL	

STATE OF MICHIGAN — SCOTT LOCKWOOD — ENGINEER No. 44355 — LICENSED PROFESSIONAL ENGINEER

SCOTT LOCKWOOD, P.E. # 44355

REVISIONS	DATE	REMARKS
1	10-18-94	KJP - REMOVE SUPERINTENDENT
2	02-05-08	KJP - RCP UNDER PWT. & ELECTRONIC PRINTS

G:\COMMUNITY\ROSEVILL\STD_DETS\R-stdel.dwg, Model, 3/12/2008 7:55:43 AM, PRINT pc3, 1:1